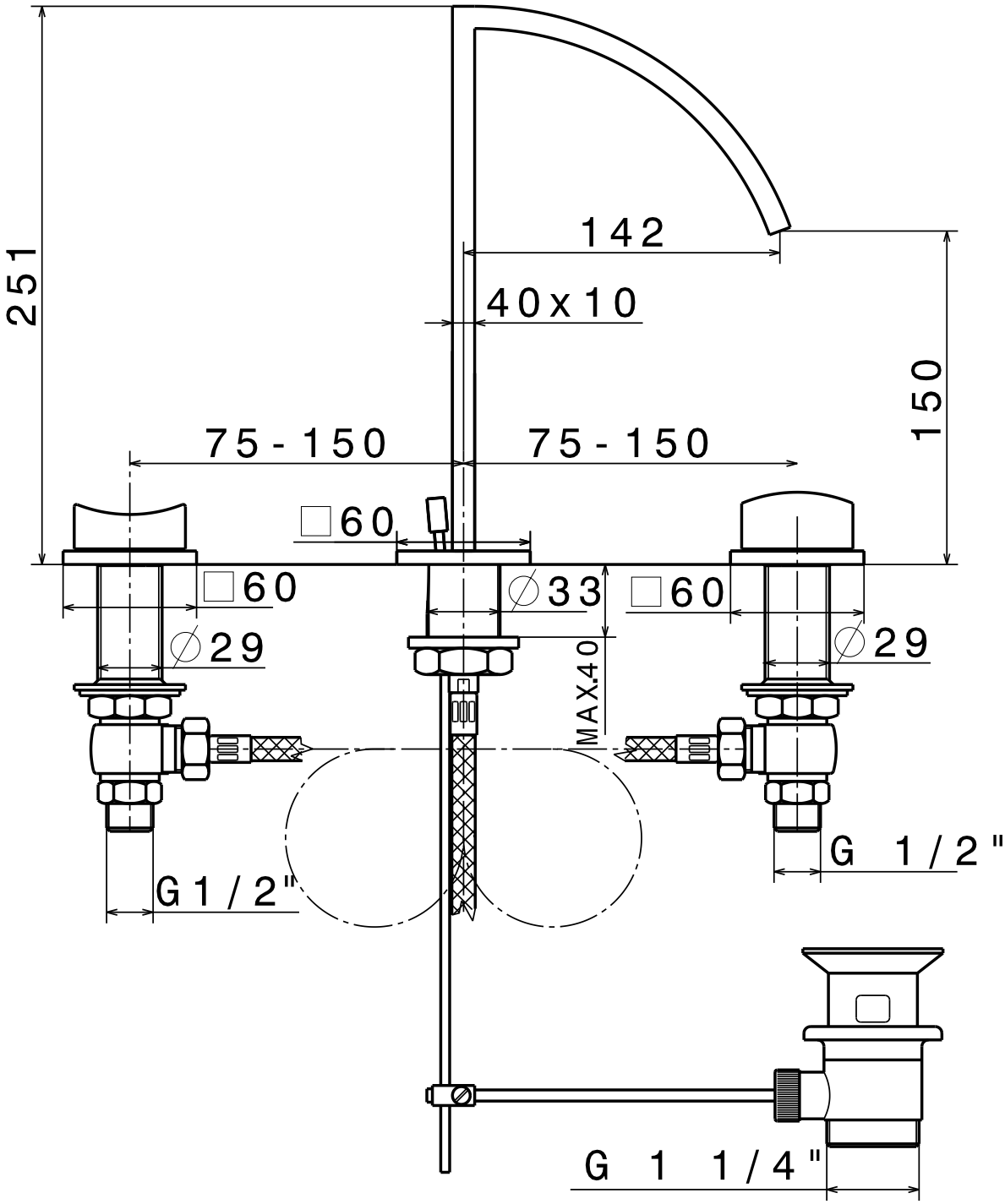
251
142
40x10
150
75 - 150
75 - 150
□60
□60
∅33
□60
∅29
∅29
MAX.40
G 1/2"
G 1/2"
G 1 1/4"